HOW A DC UTILITY METER CAN TRANSFORM THE U.S. SOLAR INDUSTRY

James A. White, P.E.
Chelan County Public Utility District
327 N. Wenatchee Washington 98801
jim@applecapital.net

ABSTRACT

Moving the location of the electric utility metering of solar power systems from the AC side of the inverter to the DC side is a cost-effective way to get electric utilities into solar power generation, while dramatically simplifying and lowering the installation costs for customers. The location of the electric utility meter typically defines the point of the electric utility's responsibility and control. Customers only have to be concerned with installing the solar PV modules, while leaving the rest of the interconnection issues up to the electric utility. Moving the metering point to the DC side allows the electric utility to own and operate the inverter like a typical transformer. Utilities do not need electrical permits for their work and they have access to low-cost financing to pay for the purchase, installation and maintenance costs of the inverter.

1. LOCATION OF THE UTILITY METER

The location of the electric meter sets the boundary between the electric utility world and the world that is governed by the National Electric Code. On the customer's side of the utility meter, all of the equipment must meet national and local standards. While on the the utility's side of the electric meter, utilities are responsible for setting and meeting their own safety, reliability and performance standards.

Electric utilities have more flexibility than any other installer when it comes to designing and installing solar power systems. While there are some exceptions, when working on their own generation equipment, electric utilities typically do not need electrical permits, are not subject to inspections by code officials, do not need UL certified equipment, and can modify equipment as they see fit. Interconnection hassles, along with a majority of the permitting hassles and interconnection agreements can go away if the electric utility is responsible for the purchase, installation and maintenance of the inverter.

1.1 DC Metering Using the Inverter

Figure 1 shows the DC metering of a solar power system using a DC kWh meter installed inside the inverter. The inverter is connected to the grid by either a meter base adapter or connected directly to the utility's transformer.

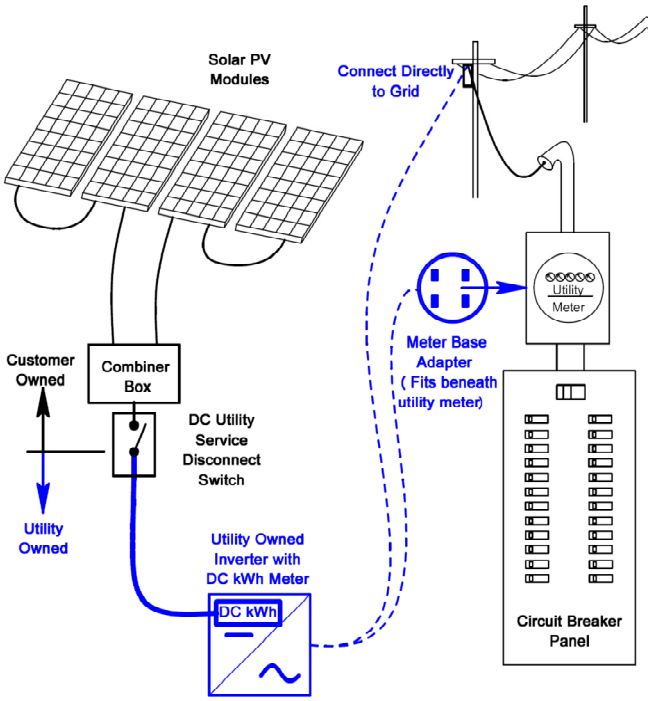

Fig. 1: DC kWh meter inside utility-owned inverter.

One problem with using the DC kWh meter within the inverter is that most inverters typically do not measure DC energy production, and even if they do, there is not a commonly accepted meter accuracy standard. It is also difficult to remove to check for calibration and testing.

1.2 DC kWh Meter and DC Meter Socket

Figure 2 shows a separate DC kWh meter and meter socket. The advantage of this system is that the DC meter can be removed for calibration and testing. Another advantage of this system is that it clearly defines where the customer's responsibility ends and the electric utility's responsibility begins.

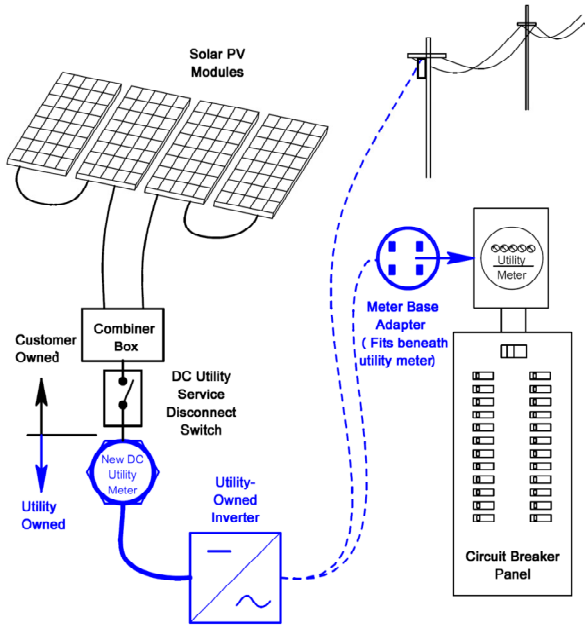

Fig. 2: DC utility meter allows utility ownership of inverter.

The disadvantage of this system is that a "utility-grade" DC kWh meter no longer exists and would have to be recreated by electric utility meter manufacturers. DC metering became less common when Thomas Edison's push for the direct current (DC) power grid got replaced by Nikola Tesla's alternating current (AC). Now that so many systems and devices are running on DC power, it may be time to reconsider going back to metering and distributing DC power in certain applications.

1.3 Inverter's Internal AC kWh Meter

Figure 3 utilizes the AC kWh meter inside an inverter that is owned and installed by the electric utility. Nearly all of the inverters manufactured today come with a built-in AC kWh production meter. While there are some concerns about meter accuracy and calibration, this system is available today and could be implemented immediately.

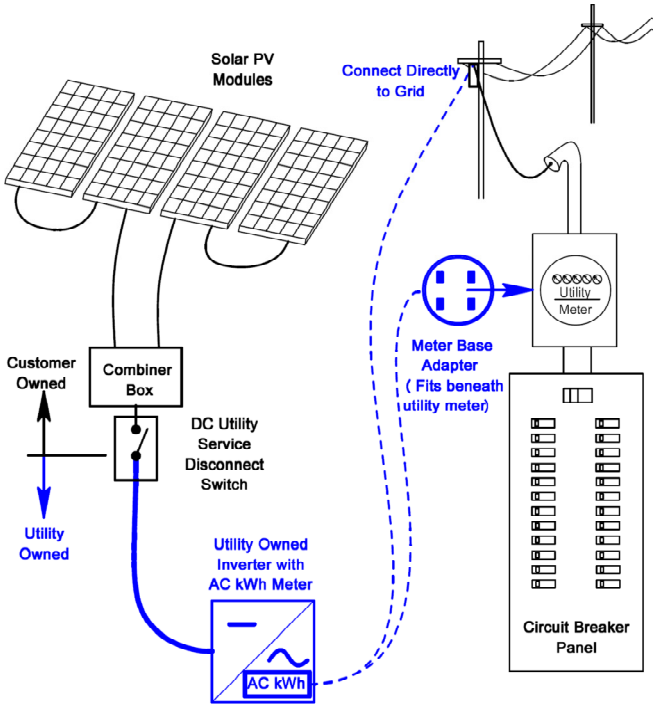

Fig. 3: AC kWh Meter Inside Utility-Owned Inverter

One potential problem with the system shown in Figure 3 is that code officials may not be willing to accept the "utility service DC disconnect switch" as the boundary between the National Electric Code (NEC) and the electric utility jurisdictions. As a consequence, installation of the inverters may fall under the NEC which requires that they be installed by licensed electricians, be UL listed and be inspected by the local code jurisdictions.

Note that all of the metering arrangements described so far in this paper are NOT net metered. AC power from the inverter connects to the utility's side of the meter so that the solar power production does not affect the home's consumption meter reading.

The solar power producer is compensated for 100% of the DC energy produced by the solar power array.

1.4 Conventional AC net metering of solar PV systems.

Figure 4 shows the typical metering of a solar power system in the United States. The facility's main electric meter is a "net meter" that measures the amount of energy flowing in and out of the home.

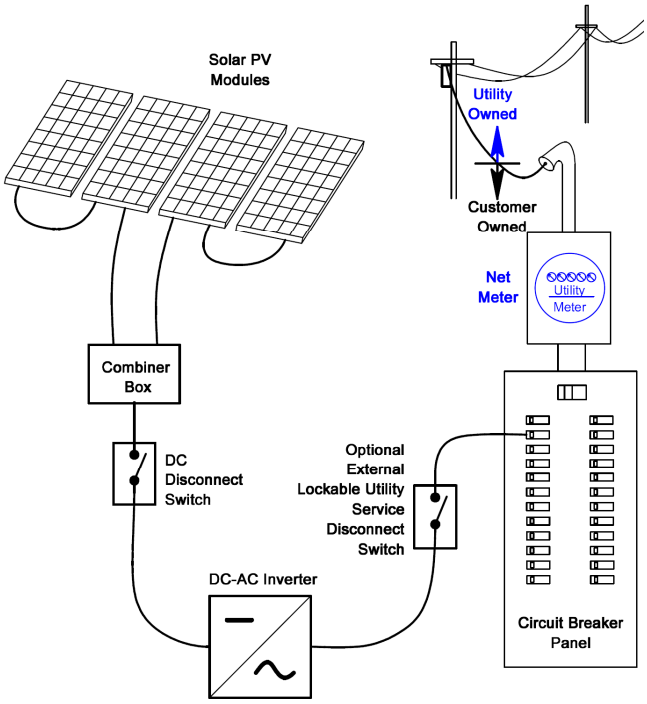

Fig. 4: AC kWh net metered solar PV system.

It is no secret that many electric utilities do not like net metering. They see it as a loss of retail revenue and they typically do not get to count the renewable generation toward meeting their renewable energy generation requirements. Even if they wanted to count the renewable energy, the net meter readings only show the excess generation, not the total amount of renewable energy that has been generated.

By giving electric utilities control and ownership of the inverter, they become an important partner and ally, instead of an adversary to solar power generation.

1.5 Conventional AC kWh metering of solar PV systems with batteries.

Figure 5 shows the metering of a net metered system with batteries for emergency back-up power.
Most grid-connected solar power systems do not have batteries because of the additional cost of purchasing and maintaining the batteries, plus the additional cost to install a critical load sub-panel. These systems typically cannot provide power to the whole home. Only the loads fed from the critical load sub-panel have power during a blackout.

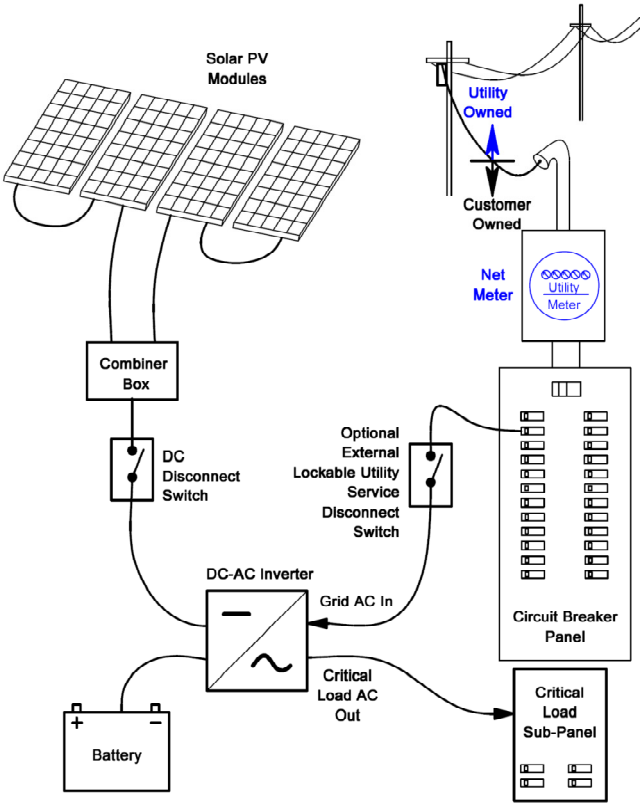

Fig. 5: AC kWh net metered solar PV system with batteries.

Electric utilities also do not receive much benefit from battery-based solar PV systems. Other than trying to encourage customer's behavior through time-of-use rates, electric utilities do not have control over the inverter to shift when the solar power is stored in the batteries and when it puts power on the grid.

It is also difficult to measure the total amount of renewable energy generated by a net metered system.

1.6 DC kWh metering of solar PV systems with batteries.

Figure 6 shows how a utility-owned inverter system could provide backup power to the entire home without rewiring the home's internal wiring. During normal operation, the solar PV system would deliver renewable energy to the grid without affecting the home's revenue meter. To repay the cost of their solar power array, the customer would be paid for every kWh of DC electricity that is generated by their system.

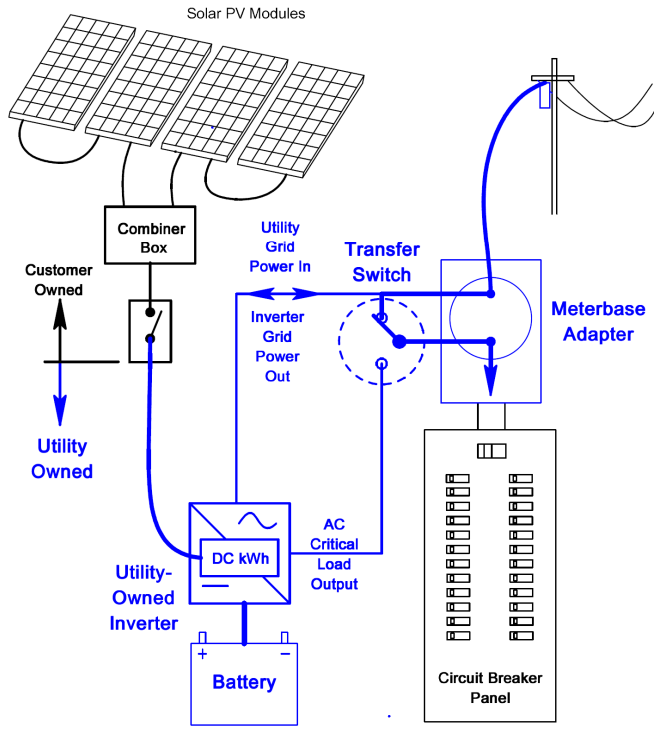

Fig. 6: Utility-owned inverter with whole-house emergency power.

While DC kWh metering is typically not displayed on non-battery inverters, many battery-based inverters do record and display DC kWh's, so this option could be implemented today using readily available off-the shelf technology.

Customers that wanted to have battery storage and emergency power capabilities could request this as an option from their electric utility. They could pay a monthly fee to have the battery system installed on their home. They would not have to pay the full cost of the battery system because the electric utility could use the batteries to provide other system benefits.

Since it is their equipment, the utilities could install their existing system control and data acquisition (SCADA) equipment inside the inverters. Because the inverter and batteries belong to the electric utility, the electric utility could use the batteries for peak shaving and to shift the time that the solar generation is added to the grid. They could also use the stored energy to meet their spinning reserve requirements.

2. REDUCE COSTS WITH DC kWH METER AND UTILITY OWNERSHIP OF INVERTER

Allowing electric utilities to own the inverter could substantially reduce the cost of solar power installations by reducing the time required to get permits, simplifying the interconnection arrangements and inspections. Utilities could also use their bulk purchasing power to get discount pricing on equipment.

2.1 Reduce lifecycle costs

A utility employee that works with solar power systems was once asked about utility ownership of the inverter. She responded, "Why would we want to own the inverter? It is the most unreliable part of the whole system!". One reason why the inverters may be unreliable is because of competition to build inverters with the lowest first cost. It is likely that utility ownership of the inverter could improve the reliability of solar power systems because they could specify long-lasting inverters that may have a higher first cost, but lower overall lifecycle costs because of their higher quality.

2.2 Reduced installation and costs

Under the proposed system, the customers would only be responsible for installing the DC portion of the solar power system.. This would include the solar modules, racking, DC wiring, grounding (if any), and a DC disconnect switch. After the solar modules are installed and inspected by the local code official, customers would simply contact the electric utility and have them install the inverter and make the grid connection.

Customers would repay the utility's cost to purchase, install and maintain the inverter by paying a nominal monthly fee on their utility bill. The monthly revenue generated by the solar power system would be enough to cover the monthly fee, plus provide a rate of return for the homeowner's cost of purchasing and installing the solar array.

Figure 7 on the following page describes how the inverter and grid interconnection can be installed in less than an hour.

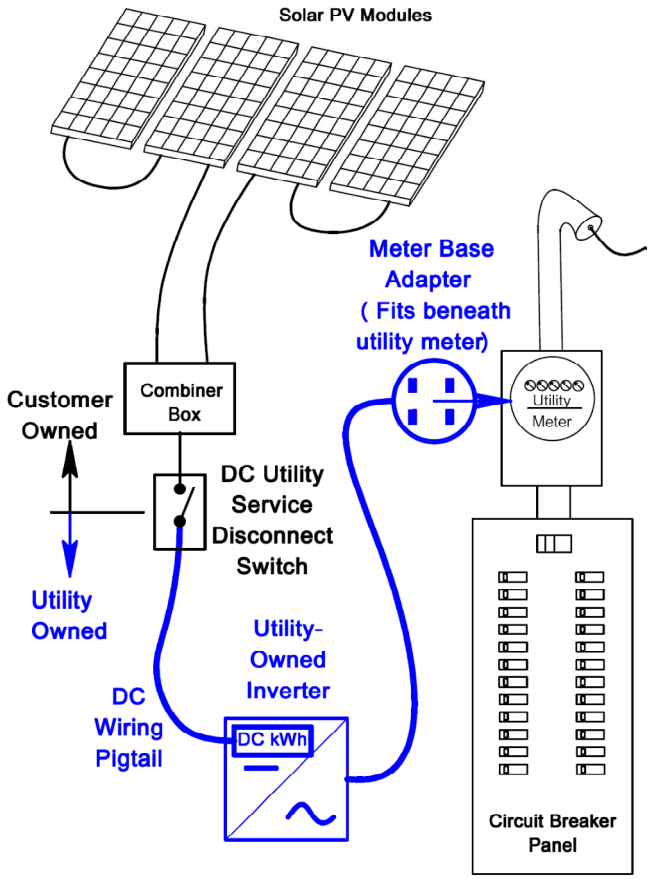

Fig. 7: Inverter installation in less than an hour.

The utility worker arrives with an inverter that is pre-connected to a meter base adapter and a DC pigtail for connecting to the DC Service Disconnect Switch. The utility worker removes the home's existing consumption meter, plugs the meter base adapter onto the meter base socket and then plugs the consumption meter into the new meter base adapter. After checking the DC voltage, the utility worker can then connects the DC wiring pigtail to the DC Utility Service Disconnect Switch.

3. CONCLUSION

Turning over ownership of the inverter to the electric utility can provide many benefits to the homeowner and the electric utility. Because they would only be responsible for purchasing and installing the solar PV modules and wiring down to the DC disconnect switch, customers would see a dramatic reduction in the installed cost of their system.

As an added option, electric utilities could add batteries and a transfer switch to provide back-up generation for the homeowners, while also being able to utilize the batteries to control the time-of-day that solar power gets added to the grid, and to provide peak load reduction or use as spinning reserves. With a transfer switch built into a meter-base adapter, the utility could also offer the solar generation and storage capabilities to residential customers to use the power during power outages or emergencies.

In short, is DC kWh meter combined with utility ownership of the inverter is a unique and low-cost way to finally get electric utilities into the game, while dramatically lowering the cost for everyone.